PUBLISHED: 24-AUG-2017
2017.0 DISCOVERY (LR), 307-01

AUTOMATIC TRANSMISSION/TRANSAXLE - VEHICLES WITH: 8HP45 8-SPEED AUTOMATIC TRANSMISSION AWD

TRANSMISSION CONTROL MODULE AND MAIN CONTROL VALVE BODY (G1509714)

REMOVAL AND INSTALLATION

44.24.05	GASKET-OIL/FLUID PAN - RENEW	3000 CC, AJ V6 (AJ126)	1.5	USED WITHINS	

transmissionmanuals.com

SPECIAL TOOL(S)



JLR-308-844

Remover/Installer, Transmission Control Module Electrical Connector

PART(S)

STEP	PART NAME	QUANTITY

Step 8	Transmission control module and main control valve body bolts	1

REMOVAL

WARNING:

Be prepared to collect escaping fluids.

CAUTION:

Make sure all suitable safety precautions are taken to protect the TCM and main control valve body electrical connector pins against electrostatic discharge.

NOTE:

The transmission control module (TCM) is part of the main control valve body and cannot be serviced separately.

All vehicles

1. Remove the transmission fluid pan.
   Refer to: Transmission Fluid Pan, Gasket and Filter (307-01 Automatic Transmission/Transaxle - Vehicles With: 8HP70 8-Speed Automatic Transmission AWD, Removal and Installation).

Vehicles with Stop/Start

transmissionmanuals.com

1.

CAUTION:

Take precautions to avoid any electrostatic charging, which could damage this component.

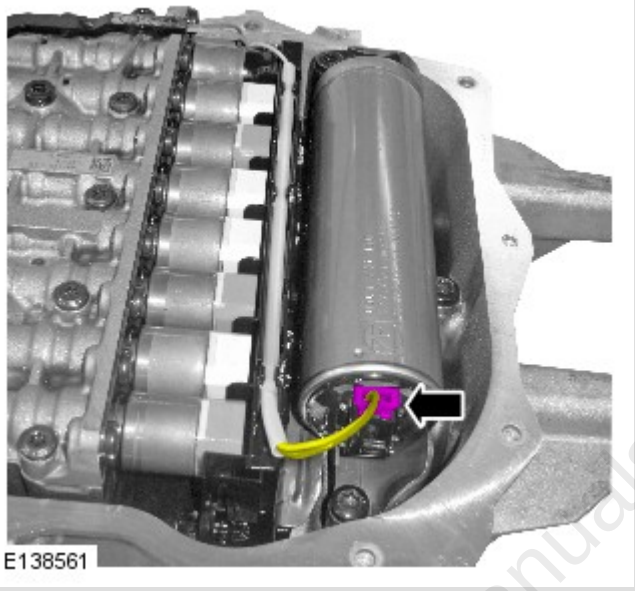

2.

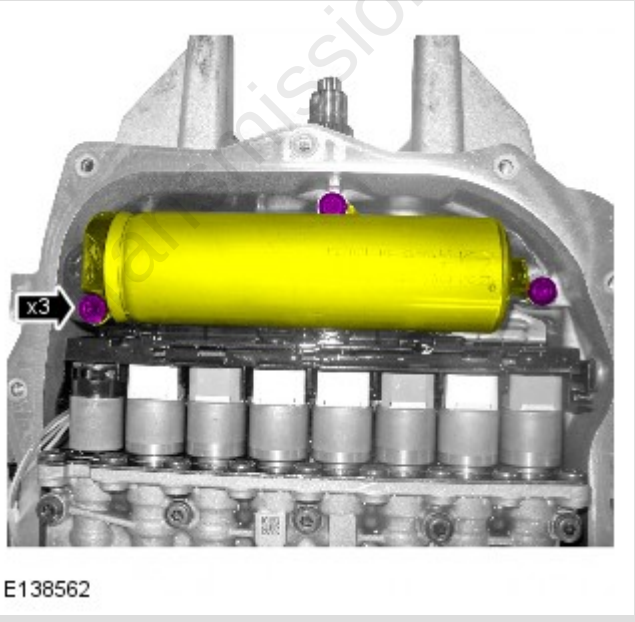

carmissionmanuals.com

3.



All vehicles

1.

CAUTION:

Take precautions to avoid any electrostatic charging, which could damage this component.

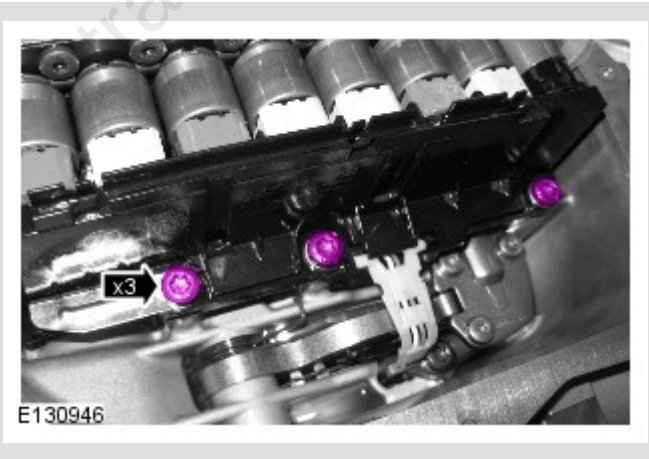

transmissionmanuals.com

2.

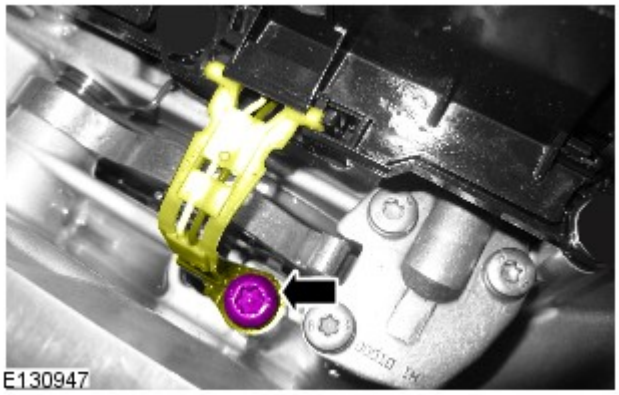

3.

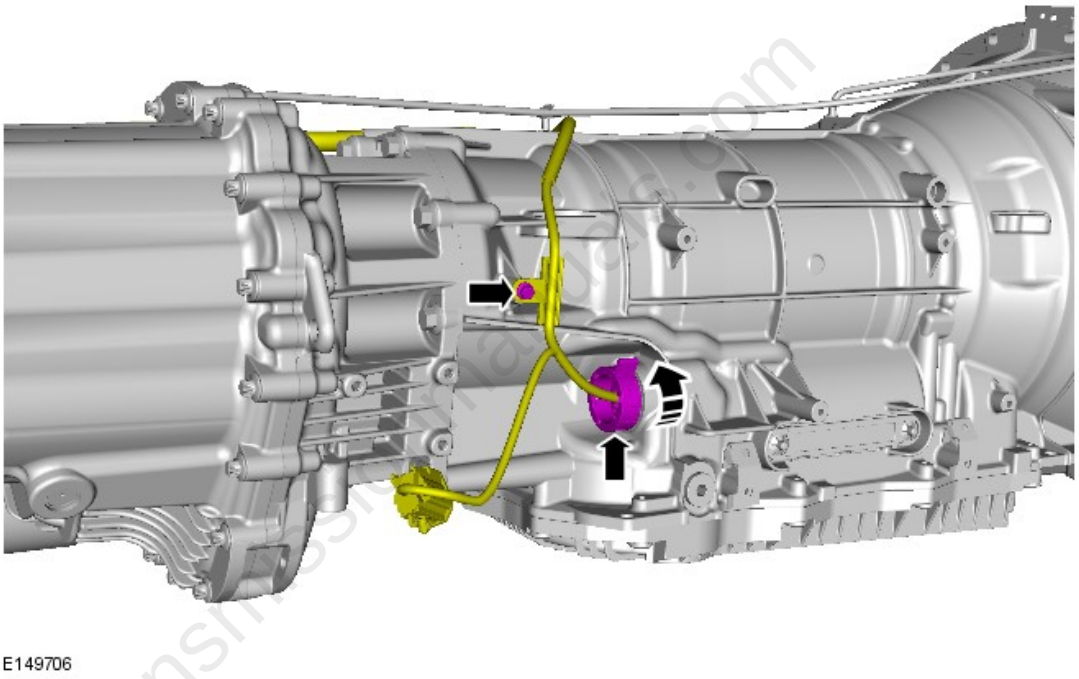

transmissionmanuals.com

4.

NOTE:

Note the orientation of the component prior to removal.

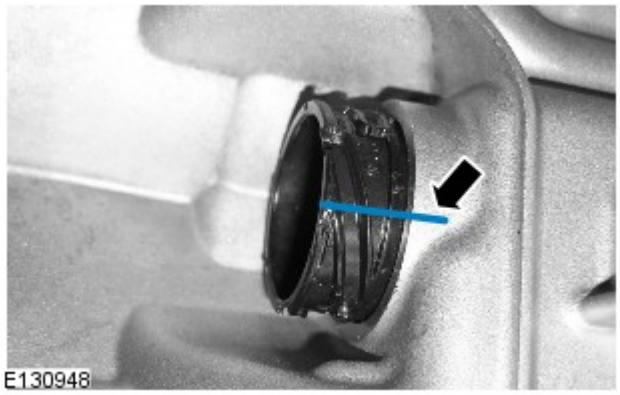

5.



6.

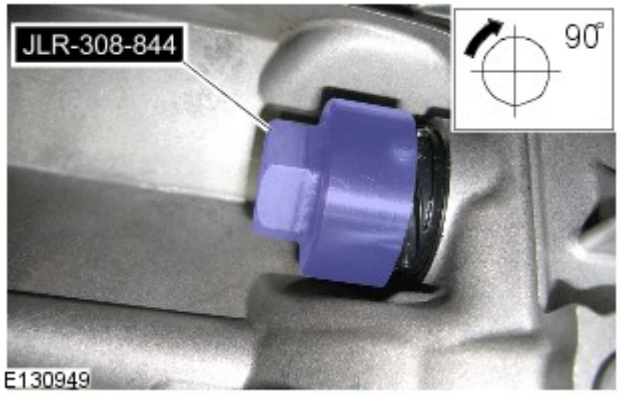

Special Tool(s): JLR-308-844

7.

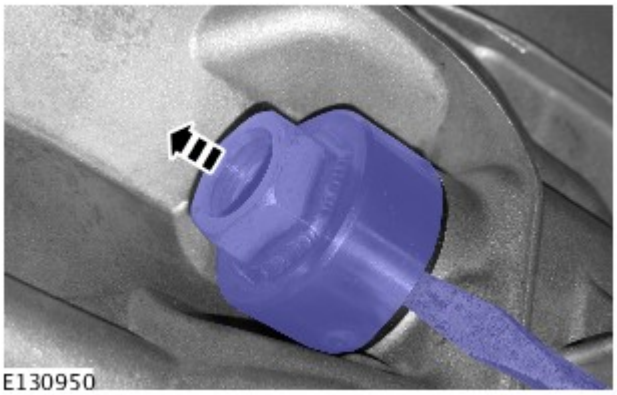

8.

CAUTION:

Discard the bolts.

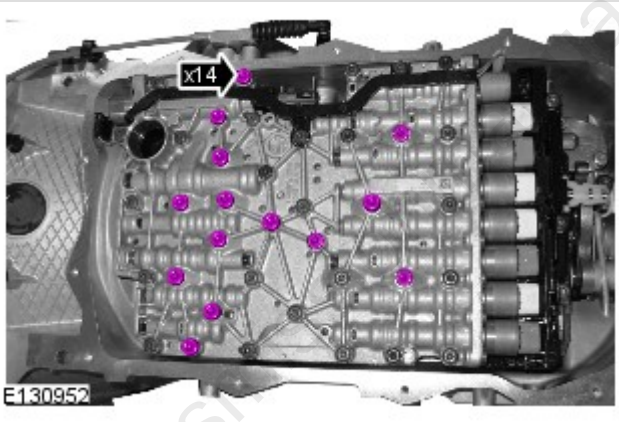

Torque: **8 Nm**

transmissionmanuals.com

9.

NOTE:

Note the position of the manual park brake release.

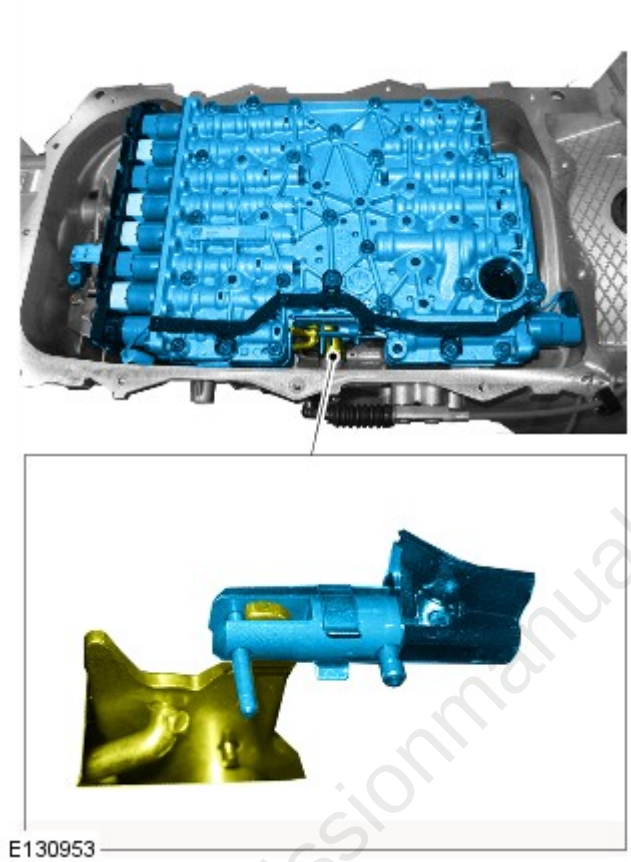

transmissionmanuals.com

INSTALLATION

All vehicles

1.

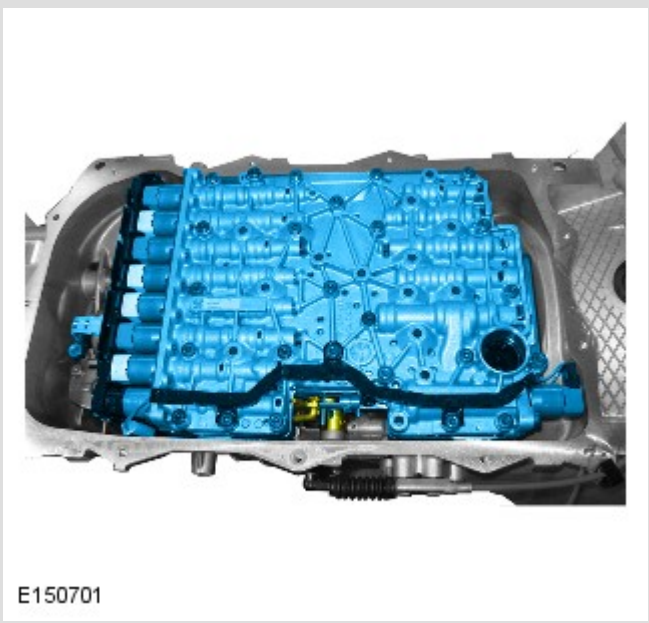

E150701

2.

NOTE:

Make sure that the component is installed to the noted removal position.

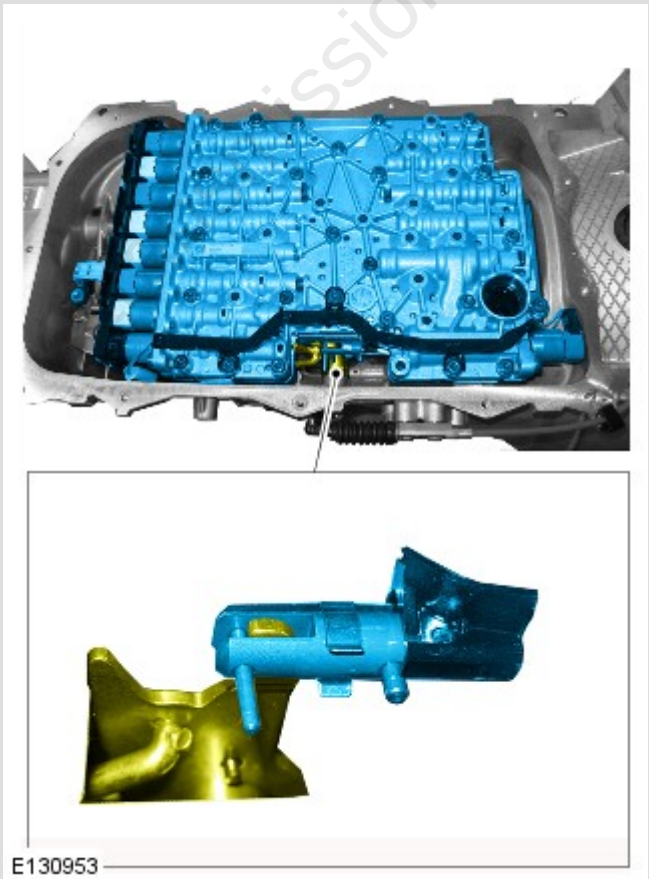

E130953

transmissionmanuals.com

3.

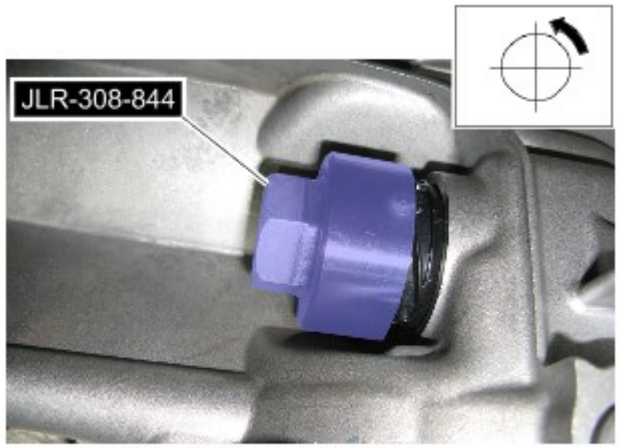

E150812

- *Special Tool(s):* JLR-308-844

4.

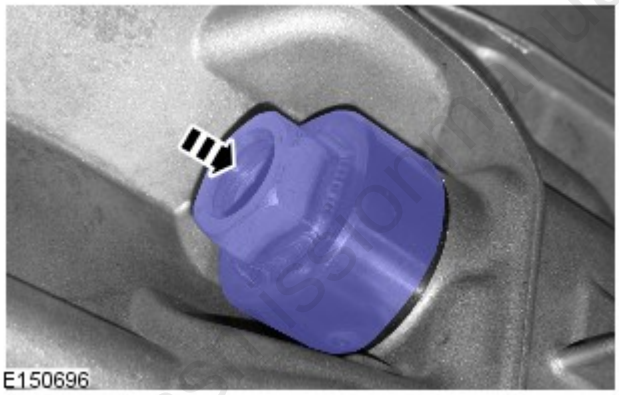

E150696

transmissionmanuals.com

5.

CAUTION:

Make sure that the electrical connector is installed in the correct orientation as noted in the removal step.

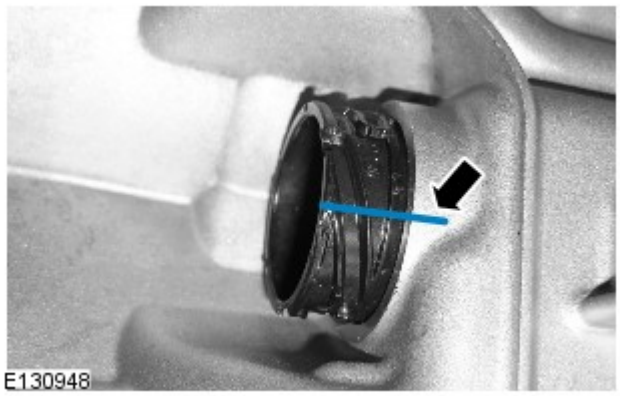

6.



transmanuals.com

7.

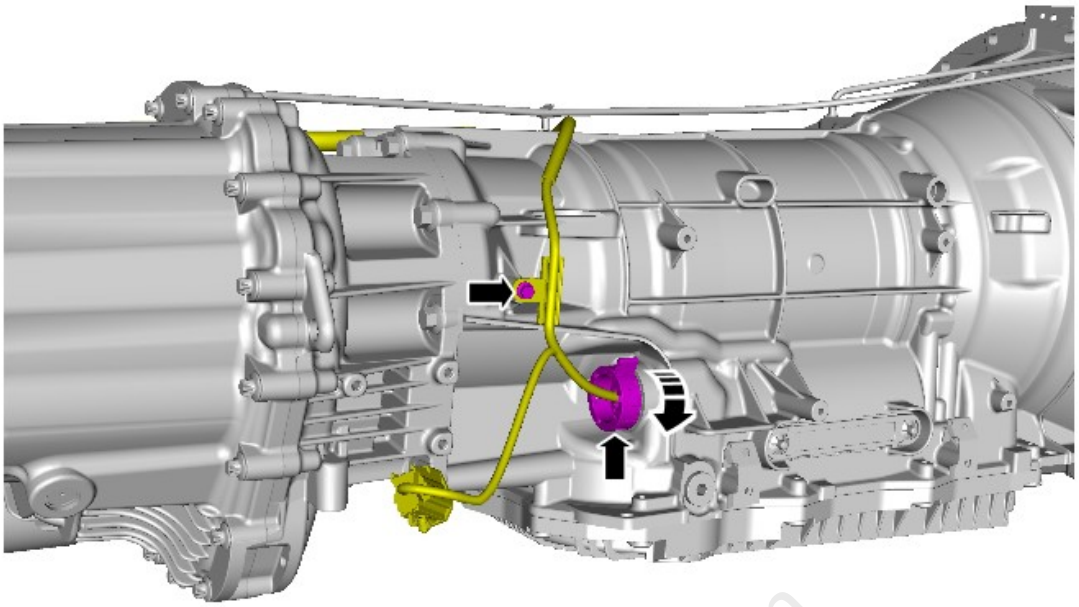

E149992

Torque: **10 Nm**

transmissionmanuals.com

8.

CAUTION:

Make sure that new bolts are installed.

NOTE:

Tighten the retaining bolts evenly and progressively.

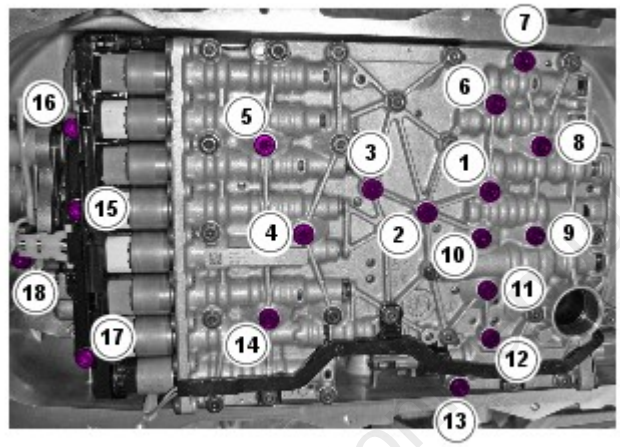

E130933

Renew Part: *Transmission control module and main control valve body bolts*
Quantity: *1* .
Torque: **8 Nm**

	Vehicles with Stop/Start

transmissionparts.com

1.



2.

CAUTION:

Make sure that new bolts are installed.

NOTE:

Tighten the retaining bolts evenly and progressively.

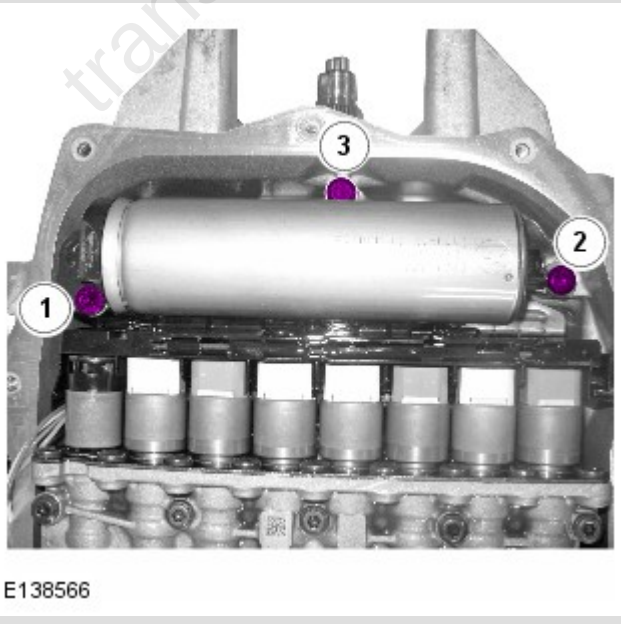

Torque: **8 Nm**

transmissionmanuals.com

3.

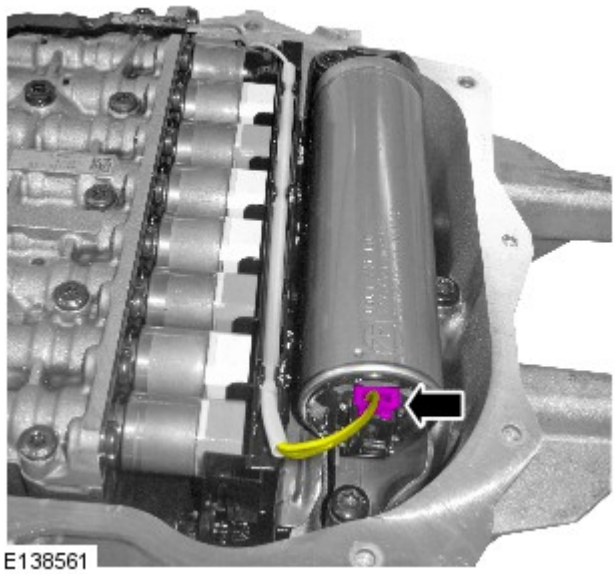

All vehicles

1. Refer to: Transmission Fluid Pan, Gasket and Filter (307-01 Automatic Transmission/Transaxle - Vehicles With: 8HP70 8-Speed Automatic Transmission AWD, Removal and Installation).

2. Using the diagnostic tool, calibrate the main control valve body and the transmission control module (TCM).

transmissionmanuals.com